DocuSign Envelope ID: F69DEC66-9951-4128-9F25-7F38C2322A8F

TRAFFIC CONTROL
MEDIAN CROSSOVER
55 MPH SPEED LIMIT OR GREATER

D-704-38

*Signs not required for projects on roadways with 55 mph or 60 mph existing speed limit.

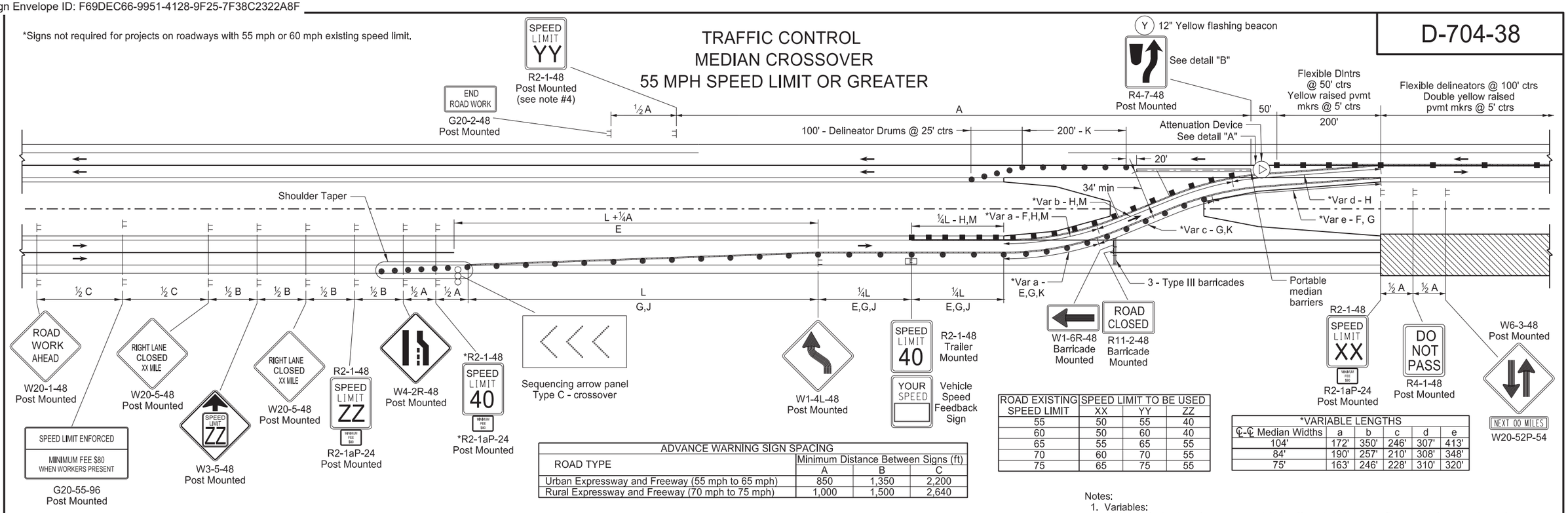

ADVANCE WARNING SIGN SPACING			
ROAD TYPE	Minimum Distance Between Signs (ft)		
	A	B	C
Urban Expressway and Freeway (55 mph to 65 mph)	850	1,350	2,200
Rural Expressway and Freeway (70 mph to 75 mph)	1,000	1,500	2,640

ROAD EXISTING SPEED LIMIT	SPEED LIMIT TO BE USED		
	XX	YY	ZZ
55	50	55	40
60	50	60	40
65	55	65	55
70	60	70	55
75	65	75	55

*VARIABLE LENGTHS					
℄-℄ Median Widths	a	b	c	d	e
104'	172'	350'	246'	307'	413'
84'	190'	257'	210'	308'	348'
75'	163'	246'	228'	310'	320'

Notes:

1. Variables:
   S=Numerical value of posted speed limit, off-peak 85th percentile speed prior to work starting, or anticipated operating speed in MPH.
   W=Width of offset in feet
   L=Taper length in feet. Speeds 45 mph or greater L=WS.
2. Place signs and barricades on the roadway on moveable assemblies. Mount signs on barricades with the sign bottom on the top of the top barricade bar.
3. Install signs R4-1-48, W6-3-48, and W20-52P-54 at one mile increments and after each interchange.
4. Place the speed limit sign only if the crossover is more than 1 mile from an interchange exit ramp.
5. Place Sequencing Arrow Panels at the beginning of the taper when possible. Where shoulder width does not provide sufficient room, move panel closer to work area and place on roadway surface. Use Type C on roadways with high traffic speeds and volumes (over 40 mph or 5000 ADT or greater)
6. Cover existing speed limit signs within a reduced speed zone.
7. Upon approval, the Engineer will measure obliterated or covered pavement marking as Obliteration of Pavement Marking.
8. As an option, use portable sign supports in lieu of post mounted signs in accordance with NDDOT Standard Drawing D-704-14.
9. Reduce speed when placing traffic control devices. Place "Minimum Fee $80" signs below speed limit signs in reduced speed areas. Place "Work Zone Speed Limit Enforced" sign in advance of the project at the time traffic control devices are installed.
10. Determine proper size, waterproof junction box, and attach to skid or vertical brace assembly.

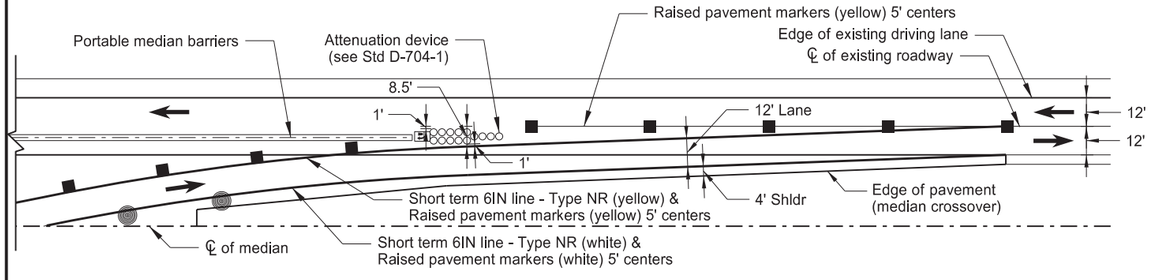

DETAIL "A"

KEY	
Flagger	Work area
Type I barricade	Sequencing arrow panel
Type II barricade	Delineator drum
Type III barricae	Flexible Delineator
Sign	

LEGEND
E Obliteration of pavement marking (10' line, 30' skip, ℄)
F Obliteration of pavement marking (edge lines)
G Short Term 6IN Line - Type NR (white) & raised pavement markers (white) 5' centers
H Short Term 6IN Line - Type NR (yellow) & raised pavement markers (yellow) 5' centers
J Drums spaced @ "S" centers
K Drums spaced @ 40' centers
M Flexible Delineators spaced @ 40' centers (O/s 2' from edge of lane line)

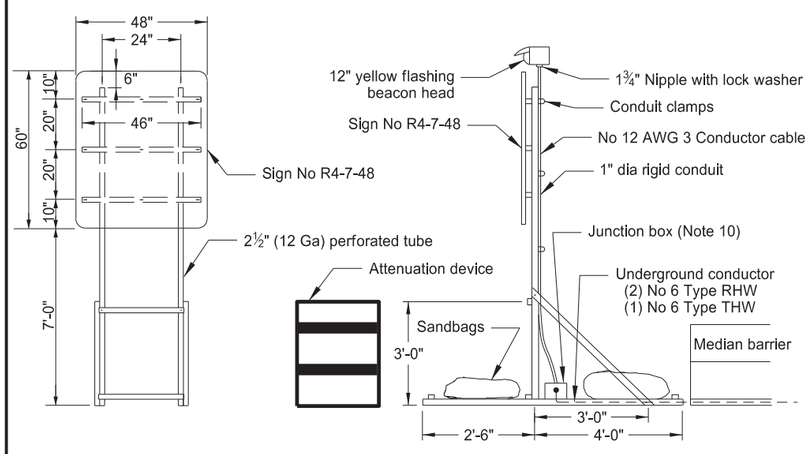

Place conductor behind barricade away from traffic, tie at each barrier connection, and drape above the ground. Place conductors a minimum of 6" underground between the barrier and pole.

DETAIL "B"

CROSSOVER TRAFFIC CONTROL QUANTITY SUMMARY 1/3 (ALL SPEEDS AND ALL CENTER TO CENTER MEDIAN WIDTHS)		
TYPE III BARRICADES	Ea	3
SEQUENCING ARROW PANELS TYPE C-CROSSOVER	Ea	1
FLASHING BEACON	Ea	1
VEHICLE SPEED FEEDBACK SIGN	Ea	1

CROSSOVER TRAFFIC CONTROL QUANTITY SUMMARY 2/3						
		PRE-CONSTRUCTION SPEED LIMIT				
		55 MPH	60 MPH	65 MPH	70 MPH	75 MPH
ATTENUATION DEVICES	Ea	1 Type B-55	1 Type B-60	1 Type B-65	1 Type B-70	1 Type B-75
PORTABLE MEDIAN BARRIER	LF	220' (75' C-C Median), 214' (84' C-C Median), and 208' (104' C-C Median)				

CROSSOVER TRAFFIC CONTROL QUANTITY SUMMARY 3/3																	
		75' C-C Median					84' C-C Median					104' C-C Median					
		Pre-Construction Speed Limit					Pre-Construction Speed Limit					Pre-Construction Speed Limit					
		55 mph	60 mph	65 mph	70 mph	75 mph	55 mph	60 mph	65 mph	70 mph	75 mph	55 mph	60 mph	65 mph	70 mph	75 mph	
DELINEATOR DRUMS	Ea	48	48	48	51	52	48	48	48	52	52	48	48	48	52	53	
FLEXIBLE DELINEATORS	Ea	20	21	21	21	22	21	22	22	22	23	23	24	24	24	25	
OBLITERATION OF PAVEMENT MARKING	SF	275	282	290	300	308	295	303	310	321	329	310	317	325	335	343	
RAISED PAVEMENT MARKERS (YELLOW)	Ea	217	220	223	226	229	225	228	231	234	237	240	243	246	249	252	
RAISED PAVEMENT MARKERS (WHITE)	Ea	341	359	377	395	413	349	367	385	403	421	364	382	400	418	436	
SHORT TERM 6IN LINE-TYPE NR (YELLOW)	LF	881	896	911	926	941	920	935	950	965	980	996	1,011	1,026	1,041	1,056	
SHORT TERM 6IN IINE-TYPE NR (WHITE)	LF	1,706	1,796	1,886	1,976	2,066	1,745	1,835	1,925	2,015	2,105	1,821	1,911	2,001	2,091	2,181	

NORTH DAKOTA DEPARTMENT OF TRANSPORTATION

9-7-2012

REVISIONS

DATE	CHANGE
06/23/14	Revised Note 8
03/15/16	Removed Do Not Pass sign & updated notes
11/14/16	Revised attenuation width, termination area, & quantities
08/17/17	Updated note & quantities
11/01/19	Note, sign #s, Del Drums update
12/08/21	Switched order of Road Work Ahead and Spd Limit Enforced & added Dollars At Work
12/20/23	Removed Dollars at Work sign, shortened Xover & revised tables

KIRK J. HOFF REGISTERED PROFESSIONAL PE-4683 ENGINEER NORTH DAKOTA

Kirk J. Hoff

12/20/23